具有NTC功能，10mA终止电流的10V 1A 线性充电芯片

10V/1A Linear Charger with NTC and 10mA Termination Current

■ FEATURES

- 10V maximum input voltage
- 4.2V charge termination voltage
- Programmable Charge Current
- 10mA Termination Current
- 2.5V Trickle Charge Threshold
- 6.9V Input Over-Voltage Protection
- NTC function available
- Automatic recharge
- Charge and charge termination Indications
- Less than 1μA BAT Leakage Current when no charging
- Charge Current Thermal Foldback for Thermal Protection
- Packages: Pb-free Packages, ESOP8, DFN2×2-8L, SOT23-5

- 10V最大输入电压
- 4.2V充电截止电压
- 可设置充电电流
- 10mA充电截止电流
- 2.5V涓流充电阈值
- 6.9V过压保护
- NTC功能
- 电池耗电后可自动恢复充电
- 充电及充电完成显示
- 不充电时，BAT端低于1uA漏电
- 触发温度保护前可自动降低充电电流
- ESOP8, DFN2×2-8L, SOT23-5封装

■ APPLICATIONS

- E-Cigarette
- Bluetooth devices
- Toys
- Portable devices
- Li-ion battery powered devices

- 电子烟
- 蓝牙设备
- 玩具
- 便携式设备
- 锂电池供电设备

■ DESCRIPTION

The HT4126 is a fully integrated single-cell Li-ion battery charger. It accepts an input voltage up to 10V and will be disabled when the input voltage exceeds 6.9V.

The battery is charged in three phases: trickle, constant current, and constant voltage. Trickle charging is for batteries that is deeply discharged. The charge current in constant charge mode can be programmed by an external resistor. Constant voltage mode is automatically enabled once the battery's voltage reaches the threshold.

The built-in thermal foldback mechanism can regulate the charge current to control the die temperature during high power operation or at high ambient temperature.

ESOP8, DFN2×2-8L, SOT23-5 is available for HT4126.

HT4126是一颗单节锂电池充电芯片。其可输入最大10V的电压，在超过6.9V时，芯片将关闭。

电池充电具有3种模式：涓流充电、恒流充电、恒压充电。电池过放时，芯片首先进入涓流成电。恒流充电电流可通过外部电阻设置。当电池电压达到阈值，恒压充电自动启动。

当功率过高、环境温度过高时，芯片内置的温度保护功能能自动调节充电电流。

该产品提供ESOP8, DFN2×2-8L, SOT23-5封装。

■ TYPICAL APPLICATION

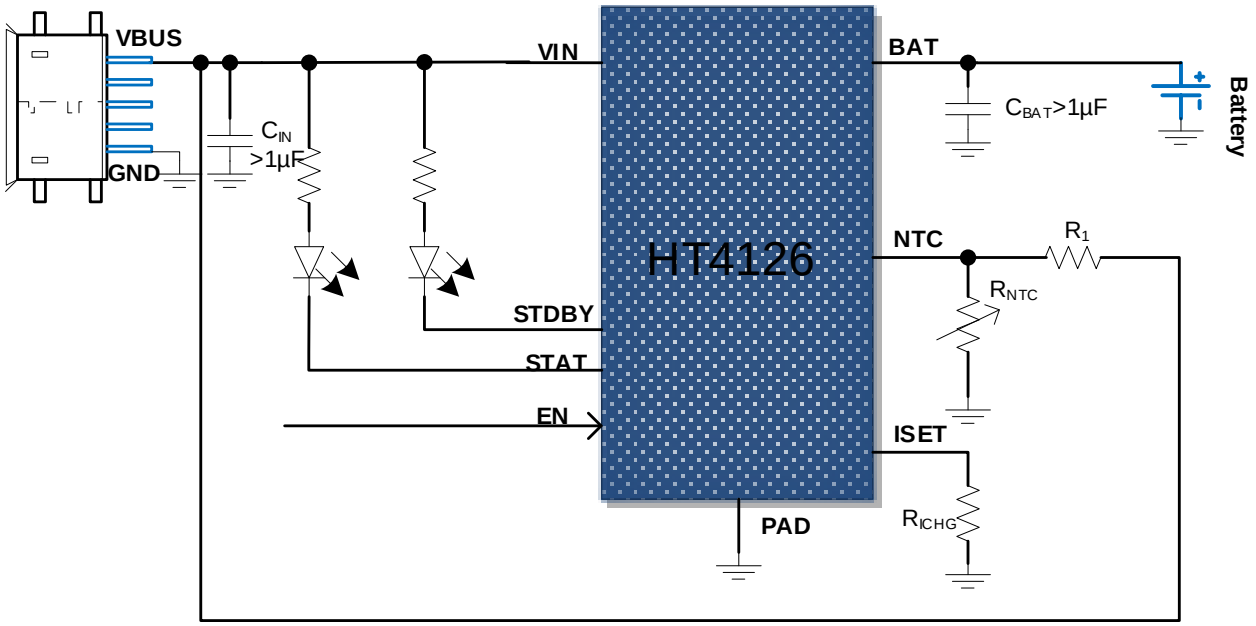

■ ORDERING INFORMATION

Part Number	Package Type	Marking	Operating Temperature Range	Shipping Package / MOQ
HT4126SPER	ESOP8 (SPE)	HT4126 YYYMAAB[1]	-40℃～85℃	Tape and Reel (R) / 2500pcs
HT4126SPET	ESOP8(SPE)	HT4126 YYYMAAB	-40℃～85℃	Tube (T) / 100pcs
Other packages	TBD	TBD	-40℃～85℃	TBD

Part Number

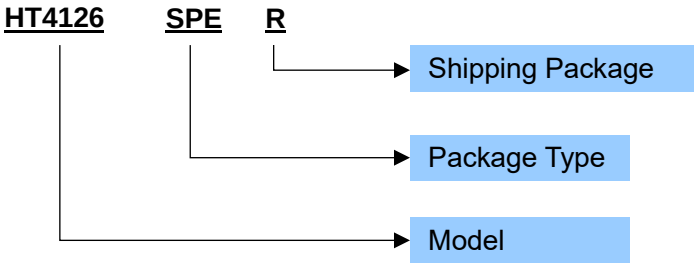

Production Tracking Code

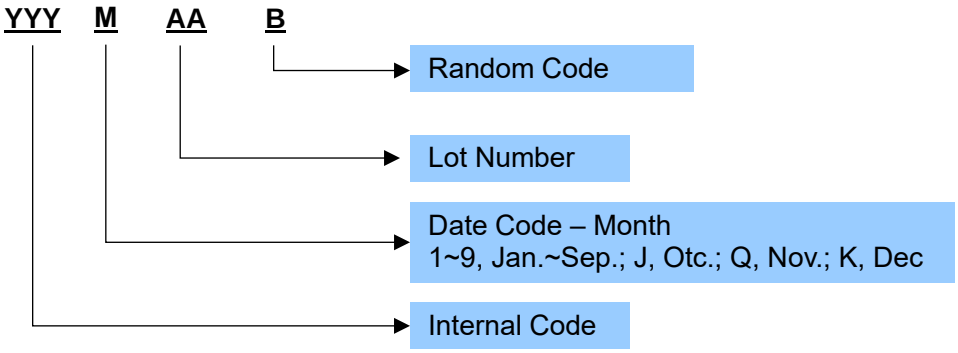

[1] YYYMAAB is production tracking code

■ TERMINAL CONFIGURATION

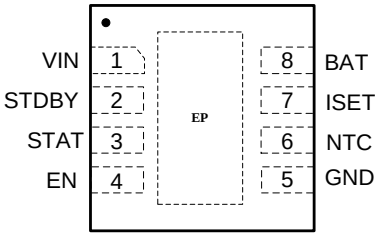

HT4126DNE (DFN2×2-8L)

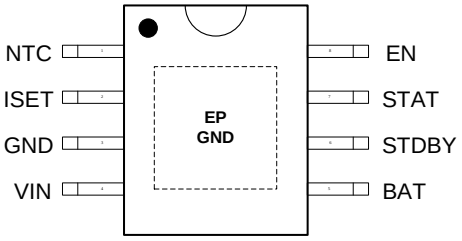

HT4126SPE (ESOP8)

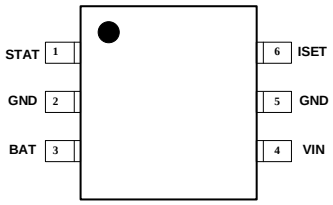

HT4126STN (SOT23-6)

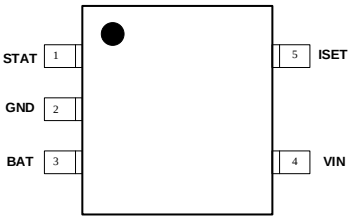

HT4126STN (SOT23-5)

Top View

■ TERMINAL FUNCTION

Name	Description
VIN	Power supply. 电源输入
STDBY	Charge termination indication, open drain output. It is logic low when the charge is finished. When in status of charging, it becomes high-impedance. 充电停止显示，开漏输出，充电时，为高阻；充电结束，为低。
STAT	Charge indication, open drain output. It is logic low when charging and turns to high impedance when the charging is finished. 充电显示，开漏结构。充电时，输出低，充电结束，为高阻。
EN	Enable input. Once it is pulled high or floating, charger is enabled. Once it's pulled low, charger is disabled. 使能输入，当拉高或悬空时，芯片使能；拉低时，芯片关闭
GND	System ground. 系统地
NTC	Temperature qualification voltage. 温度保护输入端，接NTC电阻到地
ISET	Charge current setting. Connect a resistor between this pin and GND to set the charge current. 接电阻到地，可设置充电电流。
BAT	Charger output pin, Connect it to the battery. 接电池端。

■ SPECIFICATIONS[1]

● Absolute Maximum Ratings [2]

PARAMETER	Symbol	MIN	TYP	MAX	UNIT
Power supply voltage for VIN	VIN	-0.3		10	V
STDBY, STAT, EN, ISET, BAT, NTC Voltages	V_{IO}	-0.3		6	V
Moisture Sensitivity Level (MSL)			MSL3		
Ambient Operating Temperature	T_A	-25		85	℃
Junction Temperature	T_J	-40		150	℃
Storage Temperature	T_{STG}	-40		150	℃

● Recommended Operating Conditions

PARAMETER	Symbol	CONDITION	MIN	TYP	MAX	UNIT
Power supply voltage for VIN	VIN				10	V
Operating supply voltage for VIN	VIN		4.5		6.10	V
Programmed Charge Current	I_{SET}		100		1000	mA
Ambient Operating Temperature	T_a		-25	25	85	℃

● Electrical Characteristics

PARAMETER	Symbol	CONDITION	MIN	TYP	MAX	UNIT
Rising power-on threshold	V_{POR_R}			4.1		V
Falling power-on threshold	V_{POR_F}			3.7		V
VIN-BAT offset voltage rising edge	V_{OS_R}	VBAT = 4.5V, R_{ISET} = 47kΩ		110		mV
VIN-BAT offset voltage falling edge	V_{OS_F}			20		mV
Over-Voltage Protection Threshold	OVP			6.9		V
OVP Threshold Hysteresis	OVP_{HYS}			100		mV
BAT Pin Sink Current	I_{SD}	Charger disabled or the input is floating			1	uA
VIN Pin Supply Current	I_{VIN}	VBAT = floating, R_{ISET} = 43kΩ, charger disabled		200		uA
Battery Charge voltage regulation	V_{CH}	R_{ISET} = 47kΩ, VIN=5V		4.2		V
I_{SET} Pin Output Voltage	V_{ISET}	VBAT = 3.8V, R_{ISET} = 120kΩ		1.231		V
Constant Charge Current	I_{SET}	R_{ISET} = 82kΩ, VBAT = 3.7V		565		mA
Trickle Charge Current	I_{TRK}	R_{ISET} = 82kΩ, V_{BAT} = 2.0V		100		mA
End-of-Charge Current	I_{MIN}			10		mA
Recharge BAT threshold voltage		V_{float} - $V_{recharge}$		320		mV
Trickle charge threshold	$V_{TRICkle}$	R_{ISET} = 47kΩ		2.5		V
Trickle charge Voltage Hysteresis	$V_{trickle\_HYS}$	R_{ISET} = 47kΩ		170		mV
Charge Current Foldback Threshold	T_{TFB}			110		℃
NTC Threshold, Under temperature protection	UTP			75%		VIN
Under temperature protection hysteresis				5%		VIN
NTC Threshold, Over temperature protection	OTP			30%		VIN
Over temperature protection hysteresis				3%		VIN
EN Pin Logic Input High			1.5			V
EN Pin Logic Input Low					0.8	V

[1] Depending on parts and PCB layout, characteristics may be changed.
[2] Stresses beyond those listed under absolute maximum ratings may cause permanent damage to the device. These are stress ratings only, and functional operation of the device at these or any other conditions beyond those indicated under recommended operating conditions is not implied. Exposure to absolute–maximum–rated conditions for extended periods may affect device reliability.

EN Pin Internal Pull Up Resistance				200		kΩ
STAT pin On-resistance when LOW		Pin Voltage = 1V		47		Ω
STAT Leakage Current when High Impedance		V_{STAT} = 5.5V			20	uA
STDBY pin On-resistance when LOW		Pin Voltage = 1V		47		Ω
STDBY Leakage Current when High Impedance		V_{STDBY}= 5.5V			20	uA

■ APPLICATION INFORMATION

The HT4126 is a fully integrated single-cell Li-ion battery charger. It accepts an input voltage up to 10V and will be disabled when the input voltage exceeds 6.9V.

The battery is charged in three phases: trickle, constant current, and constant voltage. Trickle charging is for batteries that is deeply discharged. The charge current in constant charge mode can be programmed by an external resistor. Constant voltage mode is automatically enabled once the battery's voltage reaches the threshold.

The built-in thermal foldback mechanism can regulate the charge current to control the die temperature during high power operation or at high ambient temperature.

HT4126 是一颗单节锂电池充电芯片。其可输入最大 10V 的电压，在超过 6.9V 时，芯片将关闭。

电池充电具有 3 种模式：涓流充电、恒流充电、恒压充电。电池过放时，芯片首先进入涓流成电。恒流充电电流可通过外部电阻设置。当电池电压达到阈值，恒压充电自动启动。

当功率过高、环境温度过高时，芯片内置的温度保护功能能自动调节充电电流。

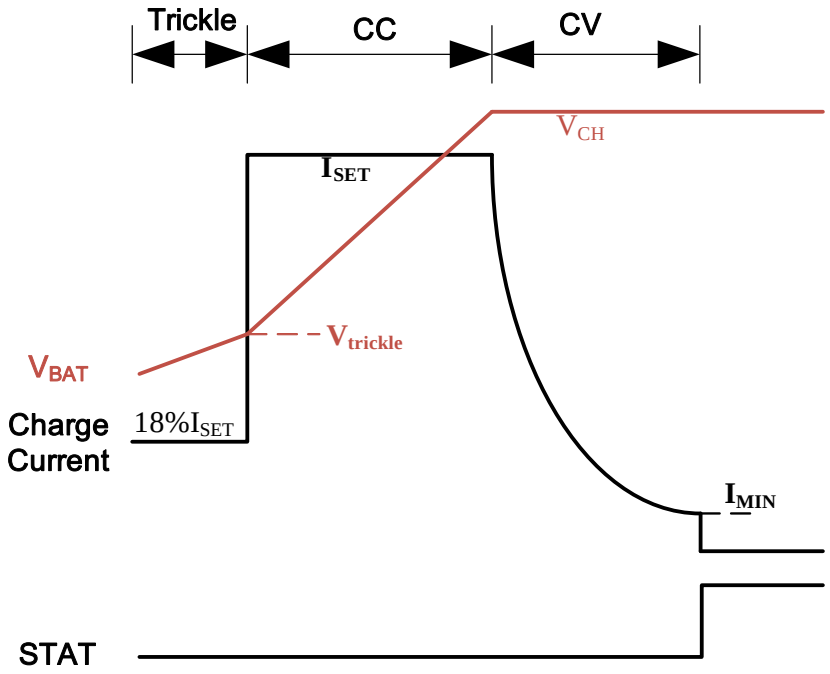

Figure 1 Battery Charging Profile

1 Charge Cycle

1.1 Trickle charge

If V_{BAT} is lower than the threshold of trickle charge (Typically 2.5V) and the input power is normally supplied, HT4126 goes into trickle charge mode, and the charge current is around 18% I_{SET}, until the battery voltage raised to 2.5V.

当 VBAT 低于涓流充电阈值(一般为 2.5V)且正常供电时，HT4126 进入涓流充电模式，充电电流约为 18% ISET，直到电池电压上升到 2.5V。

1.2 Constant current charge mode

If V_{BAT} is higher than the threshold of trickle charge (Typically 2.5V) and the input power is normally supplied, the device works in constant current charge mode, the charge current is I_{SET}, until the battery voltage raised to 4.2V.

当 VBAT 高于涓流充电阈值(一般为 2.5V)且正常供电时，设备工作在恒流充电模式，充电电流为 I_{SET}，直至电池电压升至 4.2V。

1.3 Constant voltage charge mode

When V_{BAT} reaches to 4.2V, HT4126 goes into constant voltage charge mode and the charge current begins to decrease until it drops to 10mA. That is a termination of a charge cycle.

当 VBAT 达到 4.2V 时，HT4126 进入恒压充电模式，充电电流开始下降，直到 10mA，此时充电停止。

1.4 Automatic recharge

After a termination of a charge cycle, HT4126 will monitor BAT terminal and start a new charge cycle once the battery voltage falls below 3.88 V.

在一个充电循环结束后，HT4126 将监测 BAT 端子。当电池电压低于 3.88V 时，开始新的充电循环。

2 STDBY Indication

The STDBY pin is the Charge termination indication, open drain output. It is logic low when the charge is finished and turns to high impedance when in status of charging.

充电终止指示，开漏结构。充电结束时为低，充电时则为高。

3 STAT Indication

Charge indication, open drain output. It is logic low when charging and turns to high impedance when the charging is finished.

充电状态显示，开漏结构。充电时，输出低，充电结束，为高阻。

4 EN Pin

Enable input. Once it is pulled high or floating, charger is enabled, once it's pulled low, charger is disabled. This pin has a 200kΩ internal pull-up resistor.

使能输入，当拉高或悬空时，芯片使用，拉低时，芯片关闭。引脚内部有一个 200k 上拉电阻。

5 I_{SET} Pin

The charge current can be set through the resistor R_{ISET} pulled from I_{SET} pin to Ground. The charge current

$$I_{SET} \approx 27 \times \left(\frac{R_{ISET}}{1K}\right)^{-0.874} \text{, if } R_{ISET}<100k$$

$$I_{SET} \approx 53 \times \left(\frac{R_{ISET}}{1K}\right)^{-1.025} \text{, if } R_{ISET}\geqslant 100k$$

Once the die temperature is higher than 110℃, the charge current will be adaptively decreased.

在 I_{SET} 引脚端对地下拉电阻 R_{ISET}，可设置充电最大电流，充电电流：

在高温环境下（Die 温度大于 110℃），充电电流会减小。

6 Over Voltage Protection (OVP)

The maximum input voltage of HT4126 can be up to 10V, however, if the input voltage is higher than OVP threshold (typically 6.9V), HT4126 will be disabled.

HT4126 的最大输入电压最高 10V，但如果输入电压高于 OVP 阈值(通常为 6.9V)，则 HT4126 关闭。

7 NTC terminal

HT4126 monitors battery temperature by measuring NTC voltage. The controller triggers the UTP or OTP when the volage of NTC reaches the threshold of UTP (V_{HTF}) or OTP (V_{LTF}). The temperature sensing network is showed as below.

Choose R1 and R_{NTC} to program the proper UTP and OTP points. If NTC function is not used, R1 = 100k, R_{NTC} = 100k.

电池温度由 NTC 引脚的电压测量得到。NTC 的电压由一个 NTC 电阻和外部的电阻分压器得到，芯片比较 NTC 的电压，当电压处于 OTP (V_{LTF}) 和 UTP (V_{HTF}) 之间时，允许充电。如果电池的温度超出这个区间，芯片停止充电，直到电池温度回到 OTP (V_{LTF}) 和 UTP (V_{HTF})之间。

选择合适的 R1 和 R_{NTC} 值，以达到 OTP 和 UTP 点。若 NTC 功能不适用，R1=100k,

R_{NTC}=100k。

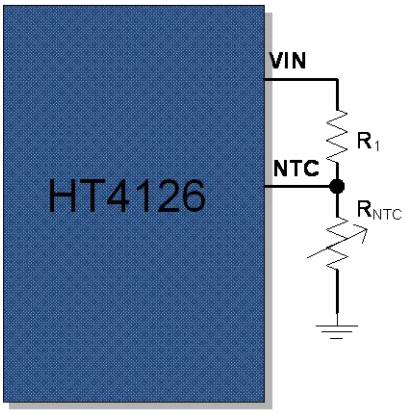

Figure 2 NTC Terminal Configuration

8 Output Capacitor Selection

The criterion for selecting the output capacitor is to maintain the stability of the charger as well as to bypass any transient load current. The minimum capacitance is a 1μF X5R ceramic capacitor. The actual capacitance connected to the output is dependent on the actual application requirement..

选择输出电容的标准是保持充电器的稳定性以及旁路任何瞬态负载电流。最小电容为 1μF X5R 陶瓷电容器。连接到输出端的实际电容取决于实际应用需求。

9 Input Power Sources

The input power source is typically a well-regulated wall cube with 1-meter length wire or a USB port. The HT4126 can withstand up to 10V on the input without damaging the IC. If the input voltage is higher than typically 6.9V, the charger stops charging.

输入电源通常是一个具有 1 米长 USB 线。HT4126 可以承受 10V 的输入电压而不损坏。如果输入电压高于通常的 6.9V，充电器将停止充电。

10 Typical Circuit Diagram

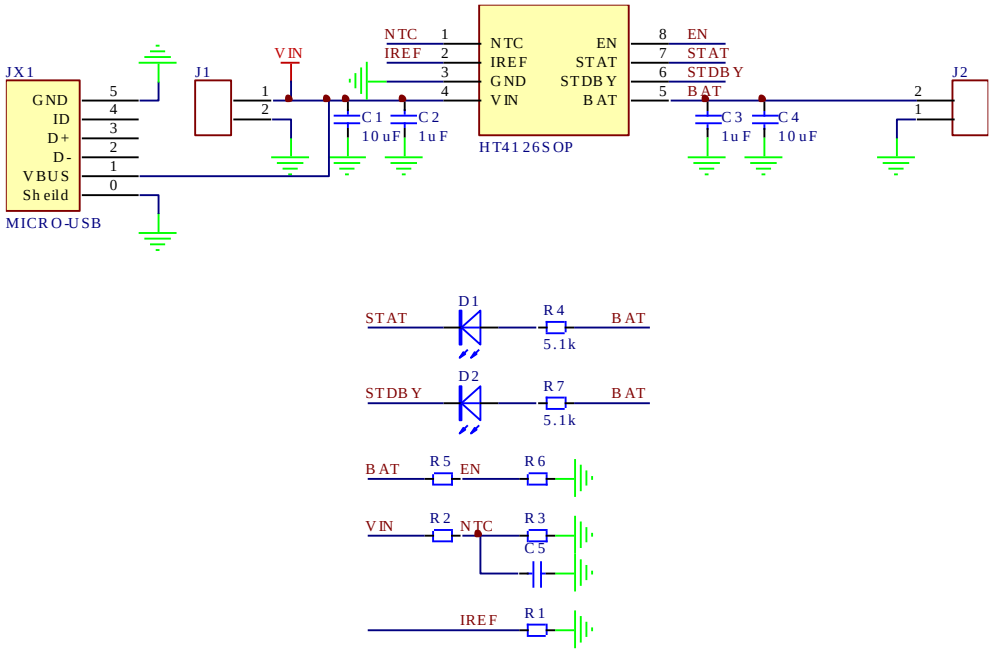

11 PCB Layout

11.1 Top Layer

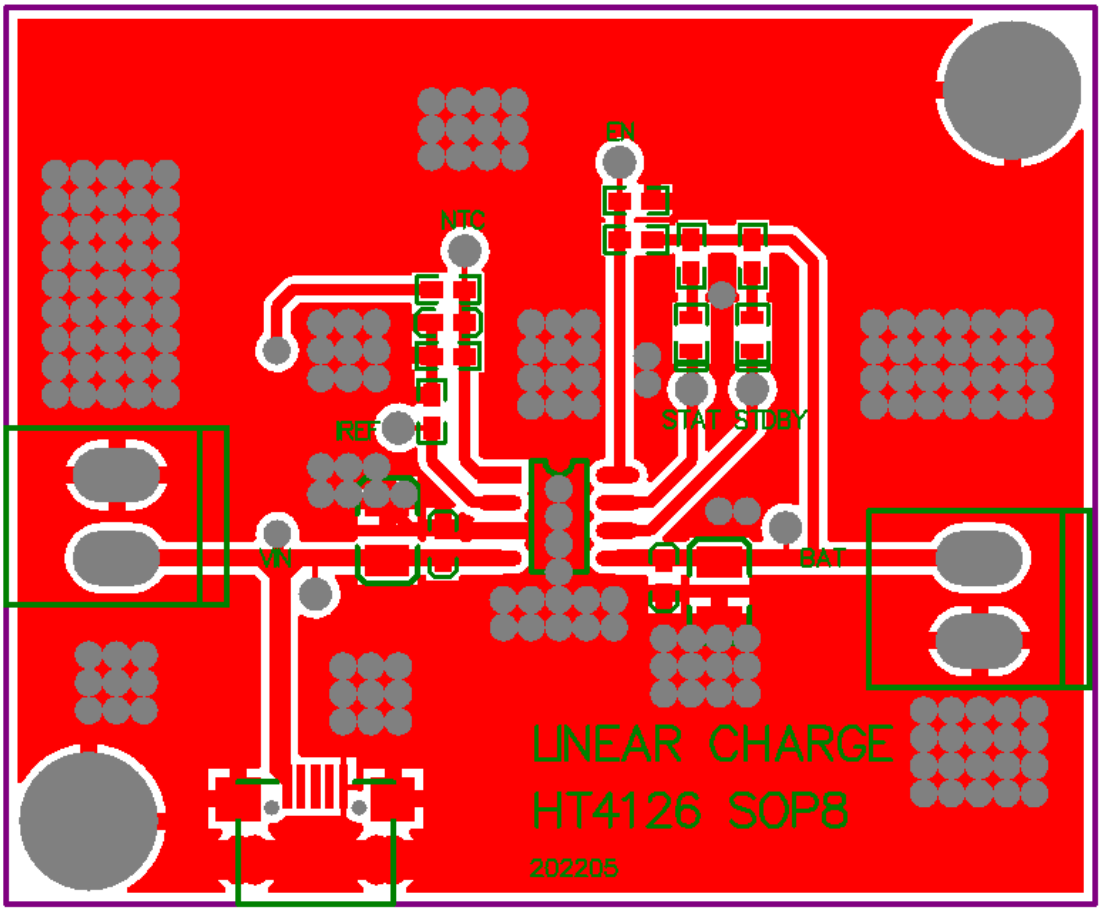

11.2 Bottom Layer

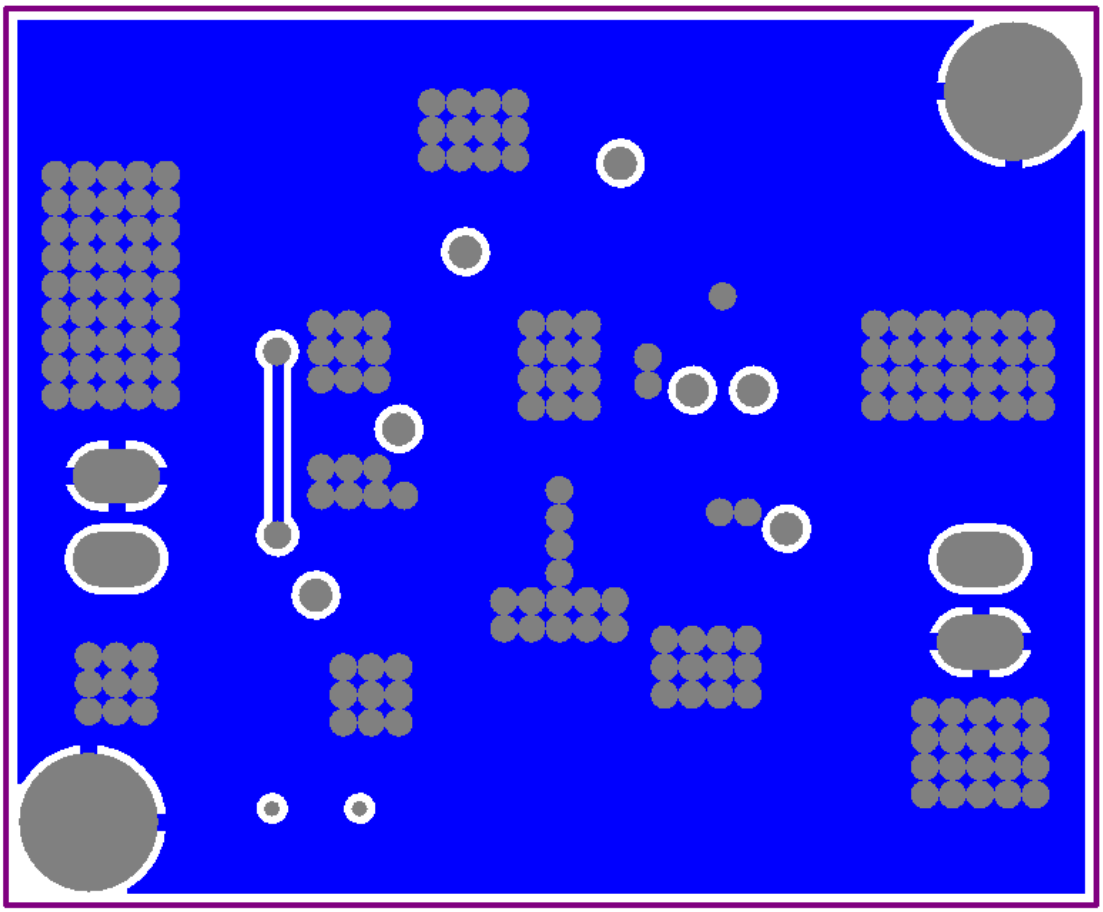

■ PACKAGE OUTLINE

SPE (ESOP8)

SOP8-PP(EXP PAD) PACKAGE OUTLINE DIMENSIONS

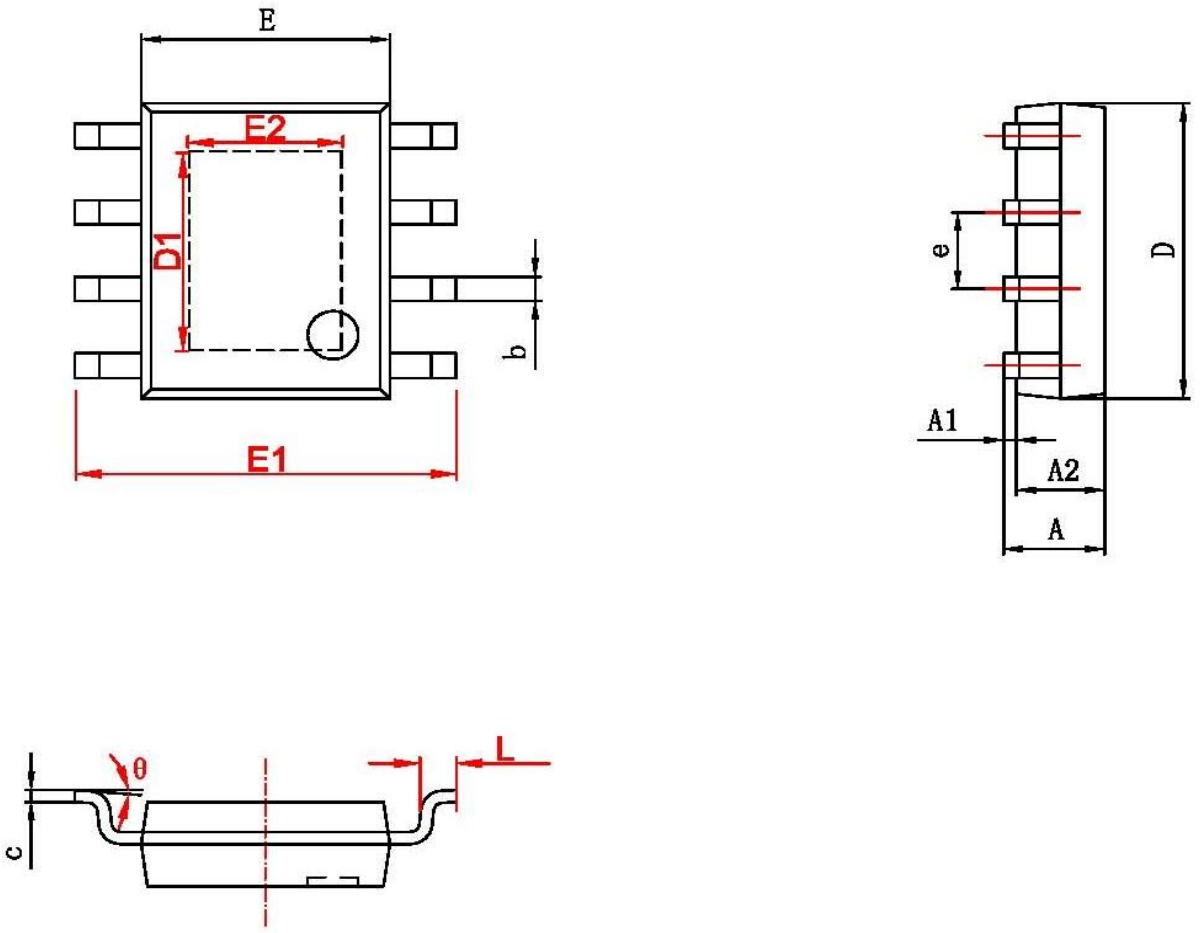

字符	Dimensions In Millimeters		Dimensions In Inches	
	Min	Max	Min	Max
A	1.350	1.750	0.053	0.069
A1	0.050	0.150	0.002	0.006
A2	1.350	1.550	0.053	0.061
b	0.330	0.510	0.013	0.020
c	0.170	0.250	0.007	0.010
D	4.700	5.100	0.185	0.200
D1	3.202	3.402	0.126	0.134
E	3.800	4.000	0.150	0.157
E1	5.800	6.200	0.228	0.244
E2	2.313	2.513	0.091	0.099
e	1.270 (BSC)		0.050 (BSC)	
L	0.400	1.270	0.016	0.050
θ	0°	8°	0°	8°

DNE (DFN2×2-8L)

TBD

IMPORTANT NOTICE
注意

Jiaxing Heroic Electronic Technology Co., Ltd (HT) reserves the right to make corrections, modifications, enhancements, improvements, and other changes to its products and services at any time and to discontinue any products or services. Customers should obtain the latest relevant information before placing orders and should verify that such information is current and complete.

嘉兴禾润电子科技有限公司（以下简称HT）保留对产品、服务、文档的任何修改、更正、提高、改善和其他改变，或停止提供任何产品和服务的权利。客户在下单和生产前应确保所得到的信息是最新、最完整的。

HT assumes no liability for applications assistance or customer product design. Customers are responsible for their products and applications using HT compoENts.

HT对相关应用的说明和协助以及客户产品的板级设计不承担任何责任。

HT products are not authorized for use in safety-critical applications (such as life support devices or systems) where a failure of the HT product would reasonably be expected to affect the safety or effectiveness of that devices or systems.

HT的产品并未授权用于诸如生命维持设备等安全性极高的应用中。

The information included herein is believed to be accurate and reliable. However, HT assumes no responsibility for its use; nor for any infringement of patents or other rights of third parties which may result from its use.

本文中的相关信息是精确和可靠的，但HT并不对其负责，也不对任何可能的专利和第三方权利的侵害负责。

Following are URLs and contacts where you can obtain information or supports on any HT products and application solutions:

下面是可以联系到我公司的相关链接和联系方式：

嘉兴禾润电子科技有限公司
Jiaxing Heroic Electronic Technology Co., Ltd.
地址: 浙江省嘉兴市凌公塘路3339号JRC大厦A座三层
Add: A 3rd floor, JRC Building, No. 3339, LingGongTang Road, Jiaxing, Zhejiang Province
Sales: 0573-82585539, sales@heroic.com.cn
Support: 0573-82586151, support@heroic.com.cn
Fax: 0573-82585078
Website: www.heroic.com.cn; wap.heroic.com.cn
Wechat MP: HEROIC_JX
请及时关注禾润官方微信公众号，随时获取最新产品信息和技术资料！